Data Sheet | Item Number: 750-337

Fieldbus Coupler CANopen; MCS

https://www.wago.com/750-337

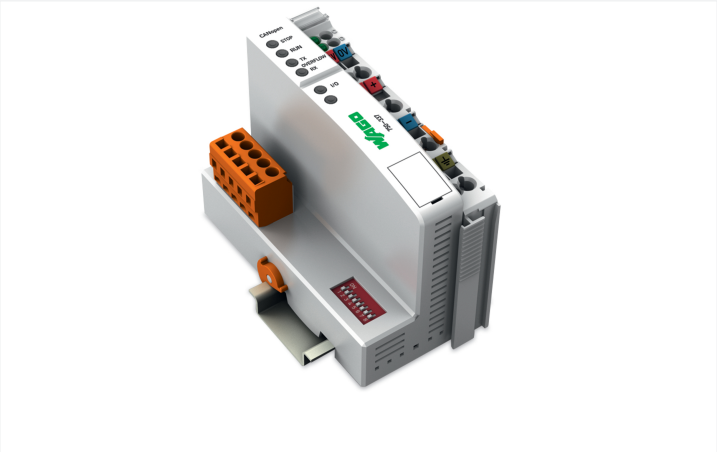

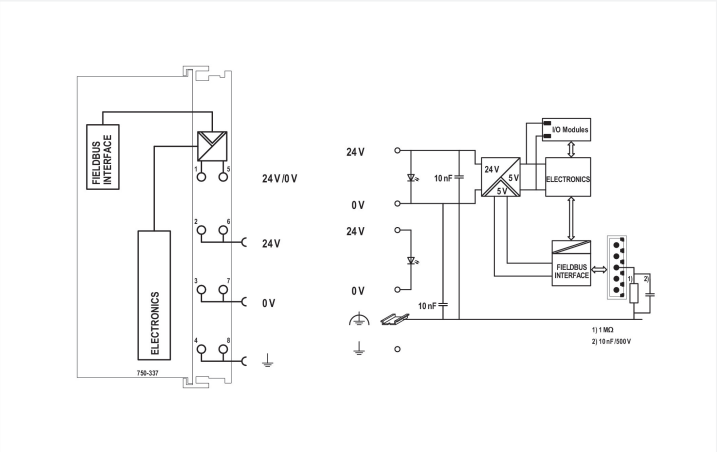

Color: light gray

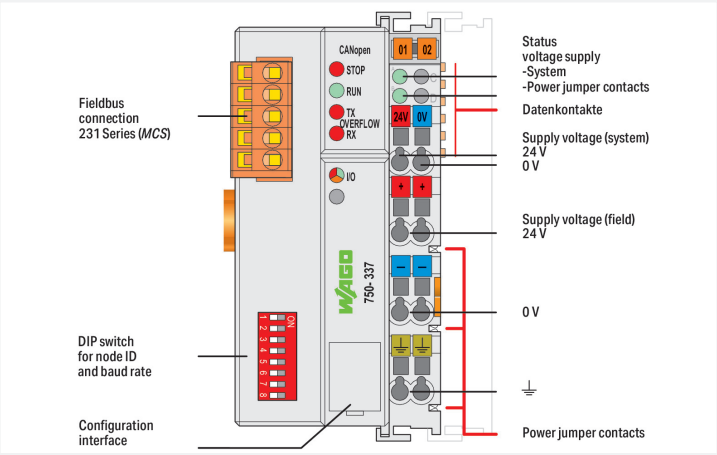

This fieldbus coupler connects the WAGO I/O System as a slave to the CANopen fieldbus. Data is transmitted via PDOs and SDOs.

The fieldbus coupler detects all connected I/O modules and creates a local process image. Analog and specialty module data is sent via words and/or bytes, digital data is sent bit by bit.

The local process image is divided into two data zones containing the data received and the data to be sent. The process data can be sent via the CANopen bus to a control system for further processing. The process output data is sent via the CANopen bus.

The data of the analog modules is stored in the PDOs according to the order in which the modules are connected to the coupler. The bits from the digital modules are sent byte by byte and also mapped in the PDOs. If the amount of digital I/O information exceeds eight bits, the coupler automatically starts with a new byte.

All entries of the object directory can be mapped as required in the 32 Rx PDOs and 32 Tx PDOs.

The complete input and output process image can be transmitted using SDOs.

Spacer modules can be set via software.

Notes

Note	**Note: Configuration files required (EDS)!**

Technical data

Communications	CANopen
Number of fieldbus nodes on master (max.)	110
Transmission rate	10 kBd ... 1 MBd
Bus segment length (max.)	1000 m
Transmission medium (communication/fieldbus)	Shielded Cu cable 3 x 0.25 mm²
Number of modules per node (max.)	64
Number of modules without a bus extension (max.)	64
Other CANopen features	NMT slave Minimum boot-up Variable PDO mapping Emergency message Life guarding Virtual module configuration
Number of PDOs	32 Tx / 32 Rx
Number of SDOs	2 SDO servers
COB ID distribution	SDO, standard
Node ID distribution	DIP switch
Communication profile	DS-301 V4.1
Device profile	DS-401 V2.0 Limit value monitoring Edge-triggered PDOs Configurable response in the event of an error
Input and output process image (fieldbus) max.	512 bytes/512 bytes
Supply voltage (system)	24 VDC (-25 ... +30 %); via pluggable connector (CAGE CLAMP® connection)
Current consumption (5 V system supply)	350 mA
Total current (system supply)	1650 mA
Supply voltage (field)	24 VDC (-25 ... +30 %); via power jumper contacts
Input current (typ.) at nominal load (24 V)	500 mA
Power supply efficiency (typ.) at nominal load (24 V)	87 %
Isolation	500 V system/field
Number of outgoing power jumper contacts	3
Current carrying capacity (power jumper contacts)	10 A

Connection data

Connection technology: communication/fieldbus	CANopen: 1 x Male connector; 5-pole
Connection technology: field supply	6 x CAGE CLAMP®
Connection technology: system supply	2 x CAGE CLAMP®
Connectable conductor materials	Copper
Connection type	System/field supply
Solid conductor	0.08 ... 2.5 mm² / 28 ... 14 AWG
Fine-stranded conductor	0.08 ... 2.5 mm² / 28 ... 14 AWG
Strip length	8 ... 9 mm / 0.31 ... 0.35 inches
Connection technology: device configuration	1 x Male connector; 4-pole

 Continued on next page

Physical data

Width	50.5 mm / 1.988 inches
Height	100 mm / 3.937 inches
Depth	71.1 mm / 2.799 inches
Depth from upper-edge of DIN-rail	63.9 mm / 2.516 inches

Mechanical data

Mounting type	DIN-35 rail

Material data

Color	light gray
Housing material	Polycarbonate; polyamide 6.6
Fire load	3.409 MJ
Weight	184 g
Conformity marking	CE

Environmental requirements

Ambient temperature (operation)	0 … +55 °C
Ambient temperature (storage)	-25 … +85 °C
Protection type	IP20
Pollution degree	2 per IEC 61131-2
Operating altitude	0 … 2000 m / 0 … 6562 ft
Mounting position	Horizontal left, horizontal right, horizontal top, horizontal bottom, vertical top and vertical bottom
Relative humidity (without condensation)	95 %
Vibration resistance	4g per IEC 60068-2-6
Shock resistance	15g per IEC 60068-2-27
EMC immunity to interference	per EN 61000-6-2, marine applications
EMC emission of interference	per EN 61000-6-4, marine applications
Exposure to pollutants	per IEC 60068-2-42 and IEC 60068-2-43
Permissible H_2S contaminant concentration at a relative humidity 75 %	10 ppm
Permissible SO_2 contaminant concentration at a relative humidity 75 %	25 ppm

Commercial data

Product Group	15 (I/O System)
PU (SPU)	1 pcs
Packaging type	Box
Country of origin	DE
GTIN	4045454526900
Customs tariff number	85176200000

Product classification

UNSPSC	32151705
eCl@ss 10.0	27-24-26-07
eCl@ss 9.0	27-24-26-07
ETIM 9.0	EC001603
ETIM 8.0	EC001603
ECCN	NO US CLASSIFICATION

 Continued on next page

Environmental Product Compliance

CAS-No.	12060-00-3 1303-86-2 1317-36-8 25550-51-0 7439-92-1 79-94-7
REACH Candidate List Substance	2,2',6,6'-tetrabromo-4,4'-isopropylidenediphenol 4-Methyl-1,2-cyclohexanedicarboxylic anhydride Diboron trioxide Lead Lead monoxide Lead titanium oxide (PbTiO3)
RoHS Compliance Status	Compliant,With Exemption
RoHS Exemption	6(c) 7(a) 7(c)-I 7(c)-II
SCIP notification number (Bulgaria)	f01fb8e5-1938-4140-a5f1-6a76d6cf3311
SCIP notification number (Czech Republic)	4ba18801-d760-496e-801f-12742930c4ff

Approvals / Certificates

General approvals

Approval	Standard	Certificate Name
EAC GZO Almaty Standart	TP TC 020/2011	EAC CoC 03083
KC National Radio Research Agency	Article 58-2, Clause 3	MSIP-REM-W43-FBC750
UL Underwriters Laboratories Inc. (ORDINARY LOCATIONS)	UL 508	E175199

Declarations of conformity and manufacturer's declarations

Approval	Standard	Certificate Name
EU-Declaration of Conformity WAGO GmbH & Co. KG	-	-
UK-Declaration of Conformity WAGO GmbH & Co. KG	-	-

Approvals for marine applications

Approval	Standard	Certificate Name
ABS American Bureau of Shipping	-	22-2219060
BSH Bundesamt fuer Seeschifffahrt und Hydrographie	-	1104
BV Bureau Veritas S.A.	-	13453/E0 BV
DNV DNV GL SE	DNV-CG-0339,Aug.2021	TAA0000194
KR Korean Register of Shipping	-	KR HMB05880-AC001
LR Lloyds Register EMEA	-	LR22180952TA
PRS Polski Rejestr Statków	-	TE/1101/880590/23

Approvals for marine applications

RINA RINA Germany GmbH	-	ELE343521XG001

 Continued on next page

Approvals for hazardous areas

Approval	Standard	Certificate Name
ATEX TUEV Nord Cert GmbH	EN 60079-0	TUEV14ATEX148929X (II 3 G Ex ec IIC T4 Gc)
CCCEx CQST/CNEx	CNCA-C23-01	2020312310000213 (Ex ec IIC T4 Gc)
IECEx TUEV Nord Cert GmbH	IEC 60079-0	IECEx TUN 14.0035 X (Ex ec IIC T4 Gc)
INMETRO TÜV Rheinland do Brasil Ltda.	IEC 60079-0	TÜV 12.1297 X
UKEx WAGO GmbH & Co. KG	EN 60079-0	UKCA_WA GO22UKEX003X_ec
UL Underwriters Laboratories Inc. (HAZARDOUS LOCATIONS)	UL 121201	E198726

Downloads

Environmental Product Compliance

Compliance Search

Environmental Product Compliance 750-337

Documentation

Manual

Product Manual CANopen Fieldbus Coupler, MCS	V 4.1.0	pdf 8389.63 KB	
System Manual Series 750/753			

System Description

750/753 Series I/O-System – General Product Information	pdf 953.35 KB	
Overview on WAGO-I/O-SYSTEM 750 approvals	pdf 770.48 KB	

Bid Text

750-337	19.02.2019	xml 7.19 KB	
750-337	21.07.2017	doc 31.00 KB	

Instruction Leaflet

CCC Ex (Additional information)	26.04.2023	pdf 159.76 KB	

Continued on next page

Application Notes

Application Note CoDeSys 2.3

Using the Profile401_1 library for data exchange between WAGO CANopen devices (a112600)	1.0.0 19.05.2003	zip 321.55 KB	

CAD/CAE-Data

CAD data

2D/3D Models 750-337

CAE data

EPLAN Data Portal 750-337

WSCAD Universe 750-337

ZUKEN Portal 750-337

Runtime Software

Firmware

0750-0337, Feldbuskoppler CANopen; MCS	V 23 18.10.2021	zip 713.60 KB	

Device Files

Device Driver

WAGO USB Service Kabel Treiber / Serie 750 und 857	6.5.3.0 10.09.2014	zip 4721.96 KB	

Libraries

Device Description File

750-914; EDS file for CANopen / 750, 752 and 767 Series	XT 12.03.2021	zip 1728.38 KB	

 Continued on next page

1 Compatible Products

1.1 Optional Accessories

1.1.1 Communication

1.1.1.1 Communication cable

Item No.: 750-923
Configuration cable; USB connector; Length: 2.5 m

Item No.: 750-923/000-001
Configuration cable; USB connector; Length: 5 m

1.1.2 DIN-rail

1.1.2.1 Mounting accessories

Item No.: 210-196
Aluminum carrier rail; 35 x 8.2 mm; 1.6 mm thick; 2 m long; unslotted; similar to EN 60715; silver-colored

Item No.: 210-198
Copper carrier rail; 35 x 15 mm; 2.3 mm thick; 2 m long; unslotted; according to EN 60715; copper-colored

Item No.: 210-508
Steel carrier rail; 35 x 15 mm; 1.5 mm thick; 2 m long; slotted; galvanized; similar to EN 60715; silver-colored

Item No.: 210-197
Steel carrier rail; 35 x 15 mm; 1.5 mm thick; 2 m long; slotted; similar to EN 60715; silver-colored

Item No.: 210-506
Steel carrier rail; 35 x 15 mm; 1.5 mm thick; 2 m long; unslotted; galvanized; similar to EN 60715; silver-colored

Item No.: 210-114
Steel carrier rail; 35 x 15 mm; 1.5 mm thick; 2 m long; unslotted; similar to EN 60715; silver-colored

Item No.: 210-118
Steel carrier rail; 35 x 15 mm; 2.3 mm thick; 2 m long; unslotted; according to EN 60715; silver-colored

Item No.: 210-115
Steel carrier rail; 35 x 7.5 mm; 1 mm thick; 2 m long; slotted; according to EN 60715; "Hole width 18 mm; silver-colored

Item No.: 210-112
Steel carrier rail; 35 x 7.5 mm; 1 mm thick; 2 m long; slotted; according to EN 60715; "Hole width 25 mm; silver-colored

Item No.: 210-504
Steel carrier rail; 35 x 7.5 mm; 1 mm thick; 2 m long; slotted; galvanized; according to EN 60715; silver-colored

Item No.: 210-113
Steel carrier rail; 35 x 7.5 mm; 1 mm thick; 2 m long; unslotted; according to EN 60715; silver-colored

Item No.: 210-505
Steel carrier rail; 35 x 7.5 mm; 1 mm thick; 2 m long; unslotted; galvanized; according to EN 60715; silver-colored

1.1.3 Marking

1.1.3.1 Group marker carrier

Item No.: 750-106
Group marker carrier

1.1.3.2 Marker

Item No.: 750-100
Marker card; as a DIN A4 sheet; plain

Item No.: 2009-145/000-006
Mini-WSB Inline; for Smart Printer; 1700 pieces on roll; stretchable 5 - 5.2 mm; plain; snap-on type; blue

Item No.: 2009-145/000-007
Mini-WSB Inline; for Smart Printer; 1700 pieces on roll; stretchable 5 - 5.2 mm; plain; snap-on type; gray

Item No.: 2009-145/000-023
Mini-WSB Inline; for Smart Printer; 1700 pieces on roll; stretchable 5 - 5.2 mm; plain; snap-on type; green

Item No.: 2009-145/000-012
Mini-WSB Inline; for Smart Printer; 1700 pieces on roll; stretchable 5 - 5.2 mm; plain; snap-on type; orange

Item No.: 2009-145/000-005
Mini-WSB Inline; for Smart Printer; 1700 pieces on roll; stretchable 5 - 5.2 mm; plain; snap-on type; red

Item No.: 2009-145/000-024
Mini-WSB Inline; for Smart Printer; 1700 pieces on roll; stretchable 5 - 5.2 mm; plain; snap-on type; violet

Item No.: 2009-145
Mini-WSB Inline; for Smart Printer; 1700 pieces on roll; stretchable 5 - 5.2 mm; plain; snap-on type; white

Item No.: 2009-145/000-002
Mini-WSB Inline; for Smart Printer; 1700 pieces on roll; stretchable 5 - 5.2 mm; plain; snap-on type; yellow

Item No.: 248-501/000-006
Mini-WSB marking card; as card; not stretchable; plain; snap-on type; blue

Item No.: 248-501/000-007
Mini-WSB marking card; as card; not stretchable; plain; snap-on type; gray

Item No.: 248-501/000-023
Mini-WSB marking card; as card; not stretchable; plain; snap-on type; green

 Continued on next page

1.1.3.2 Marker

Item No.: 248-501/000-017
Mini-WSB marking card; as card; not stretchable; plain; snap-on type; light green

Item No.: 248-501/000-012
Mini-WSB marking card; as card; not stretchable; plain; snap-on type; orange

Item No.: 248-501/000-005
Mini-WSB marking card; as card; not stretchable; plain; snap-on type; red

Item No.: 248-501/000-024
Mini-WSB marking card; as card; not stretchable; plain; snap-on type; violet

Item No.: 248-501
Mini-WSB marking card; as card; not stretchable; plain; snap-on type; white

Item No.: 248-501/000-002
Mini-WSB marking card; as card; not stretchable; plain; snap-on type; yellow

1.1.3.3 Marker carrier

Item No.: 750-103
Group marker carrier

1.1.4 Shield termination

1.1.4.1 Shield clamping saddles

Item No.: 790-108
Shield clamping saddle; 11 mm wide; diameter of compatible conductor; 3 … 8 mm

Item No.: 790-208
Shield clamping saddle; 12.4 mm wide; 3 … 8 mm

Item No.: 790-116
Shield clamping saddle; 19 mm wide; diameter of compatible conductor; 7 … 16 mm

Item No.: 790-216
Shield clamping saddle; 21.8 mm wide; 6 … 16 mm

Item No.: 790-124
Shield clamping saddle; 27 mm wide; diameter of compatible conductor; 6 … 24 mm

Item No.: 790-220
Shield clamping saddle; 30 mm wide; 6 … 20 mm

Item No.: 790-140
Shield clamping saddle; diameter of compatible conductor

1.1.5 System enclosure

1.1.5.1 System enclosure

Item No.: 850-825
IP65 enclosure; Aluminium (RAL 7032); WxHxD (160x100x160 mm); 9 x M12, 4 x M20

Item No.: 850-826
IP65 enclosure; Aluminium (RAL 7032); WxHxD (240x100x160 mm); 4 x M20, 4 x M16, 14 x M12 cable grip

Item No.: 850-827
IP65 enclosure; Aluminium (RAL 7032); WxHxD (320x100x160 mm); 4 x M20, 8 x M16, 17 x M12 cable grip

Item No.: 850-828
IP65 enclosure; Aluminium (RAL 7032); WxHxD (480x100x160 mm); 4 x M20, 10 x M16, 35 x M12 cable grip

Item No.: 850-826/002-000
IP65 enclosure; Aluminium (RAL 7035); WxHxD (240x100x160 mm); 4 x M20, 4 x M16, 14 x M12 cable grip

Item No.: 850-827/002-000
IP65 enclosure; Aluminium (RAL 7035); WxHxD (320x100x160 mm); 4 x M20, 8 x M16, 17 x M12 cable grip

Item No.: 850-828/002-000
IP65 enclosure; Aluminium (RAL 7035); WxHxD (480x100x160 mm); 4 x M20, 10 x M16, 35 x M12 cable grip

Item No.: 850-834
IP65 enclosure; Polyester (RAL 7032); WxHxD (164x100x164 mm); 9 x M12, 4 x M20

Item No.: 850-835
IP65 enclosure; Polyester (RAL 7032); WxHxD (244x100x164 mm); 4 x M20, 4 x M16, 14 x M12 cable grip

Item No.: 850-836
IP65 enclosure; Polyester (RAL 7032); WxHxD (324x100x164 mm); 4 x M20, 8 x M16, 17 x M12 cable grip

Item No.: 850-814/002-000
IP65 enclosure; Sheet steel (RAL 7035); WxHxD (200x120x200 mm); without flange plate

Item No.: 850-815/002-000
IP65 enclosure; Sheet steel (RAL 7035); WxHxD (300x120x200 mm); without flange plate

Item No.: 850-816/002-000
IP65 enclosure; Sheet steel (RAL 7035); WxHxD (400x120x200 mm); without flange plate

Item No.: 850-817/002-000
IP65 enclosure; Sheet steel (RAL 7035); WxHxD (600x120x200 mm); without flange plate

 Continued on next page